VALVEMAKER

Swing Check Valve

BS EN12334 / BS5153

SPECIFICATION

The Valvemaker swing check valve complies fully with the requirements of BS EN12334 (former standard BS5153). These conventional swing check valves are used in horizontal or vertical systems with rising flow to prevent flow reversal. Removal cover on top of valve body casing facilitates inspection of bearings and movement of door. Valves can be supplied with an extended hinge pin and external lever, cast iron weight and limit switch. Disc fitted with resilient seat can be supplied.

SCOPE OF APPLICATION

Suitable for waterworks, drainage, fire fighting, air conditioning, sea water and etc.

FLOW RATING

Valve Size	Max. Flow (l/s)	Valve Size	Max. Flow (l/s)
80	17	300	268
100	30	350	367
125	47	400	477
150	68	450	602
200	117	500	740
250	186	600	1083

However, these flow ratings are for guidance only and subject to revision depending on the system conditions – for example, the pump lift and gradient.

FLANGE DRILLING

To suit BS EN1092-2 PN16/25 etc. (former standard BS4504 PN16/25)

PROTECTIVE COATING

Epoxy coating material, approved for potable water service to BS6920

TESTING

All the valves are machine tested on each face to the nominal pressure and on the body to the test pressure in accordance with BS EN12334

Working Pressure	Body Test Pressure	Seat Test Pressure
16 NR – 16 Bar	24 Bar	17.6 Bar
25 NR – 25 Bar	37.5 Bar	27.5 Bar

FIGURE NUMBER INDEX

16NR	Gunmetal seats
16NR-S	Stainless steel seats
16NR-R	Resilient seat on disc face
16NR-LW	Fitted with external lever arm & counter weight
16NR-LWM	Fitted with external lever arm ; counter weight ; limit/micro switch
25NR____	PN25 bar ditto above combination

MATERAL

COMPONENT	STANDARD	OPTIONS on request
Body , Disc, Cover	Grey Cast Iron [1]BS EN1561–EN-GJL-200	• Ductile Iron (Spheroidal Graphite cast iron) [2]BS EN1563GJS410/18 or 420/12
Body Seat Ring and Disc Seat Ring (Trim)	Gunmetal BS1400 Grade LG-2	• Resilient – EPDM [3]BS EN681-1 and BS6920 • Stainless Steel BS970 Grade 304 • Stainless Steel BS970 Grade 316 • Aluminum Bronze BS1400 ABI (Zinc Free Bronze)
Hanger Pin	Stainless Steel BS970 Grade 302S25	• Stainless Steel BS970 Grade 316
Assembly & Fixing Bolts/Nuts	Stainless Steel BS970 Grade 304	• Hop Dip Galvanized BS729 • Stainless Steel BS970 Grade 316

Remark: former standard [1]BS1452
[2]BS2789
[3]BS2494

For Waterworks/Drainage/Sewage Purpose & General Use

VALVEMAKER

Swing Check Valve

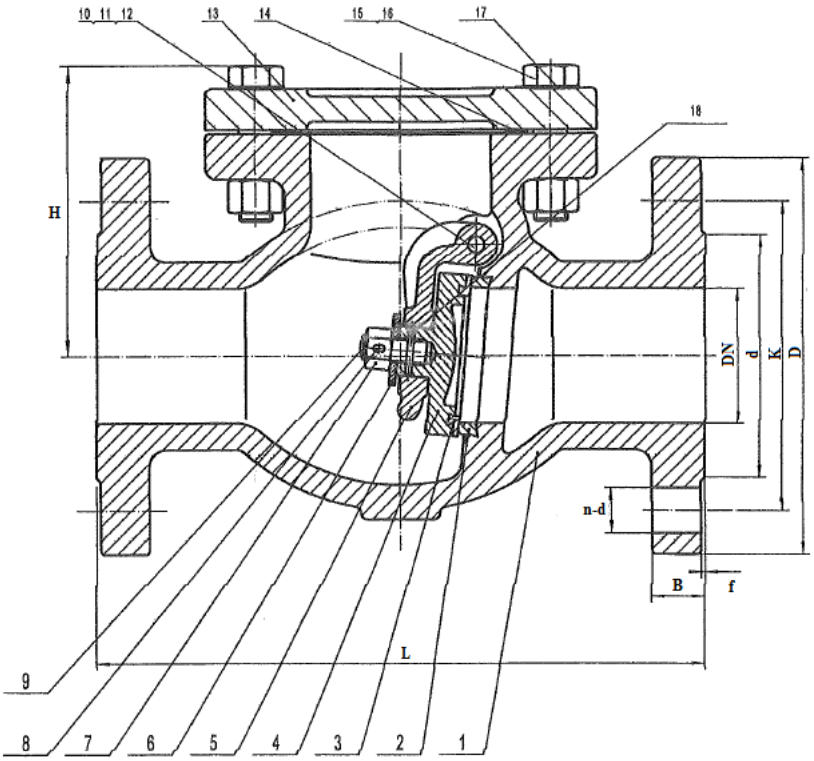

DIMENSIONS (mm)

DN	L	D	K(PCD)	d	B	f	n-d	H	Weight(kg)
50	203	165	125	99	20	3	4-19	112	
65	216	185	145	118	20	3	4-19	132	
80	241	200	160	132	22	3	8-19	141	
100	292	220	180	156	24	3	8-19	162	
150	356	285	240	211	26	3	8-23	211	
200	495	340	295	266	30	3	12-23	270	
250	622	405	355	319	32	3	12-28	316	
300	698	460	410	370	32	4	12-28	357	
350	787	520	470	429	36	4	16-28	560	
400	914	580	525	480	38	4	16-31	589	
450	914	640	585	548	40	4	20-31	645	
500	1016	715	650	609	42	4	20-34	702	
600	1219	840	770	720	48	5	20-37	812	

Ref.	COMPONENT	MATERIAL	BS STANDARD	BS EN Standard
1	BODY	CAST IRON - C I	BS1452 GRADE 220	BS EN1561-EN-GJL-200
2	BODY SEAT RING	COPPER ALLOY - LG2	BS1400 LG2	BS EN1982-CC491K
3	WEDGE SEAT RING	COPPER ALLOY - LG2	BS1400 LG2	BS EN1982-CC491K
4	WEDGE	CAST IRON - CI	BS1452 GRADE 220	BS EN1561-EN-GJL-200
5	HANGER	SG CAST IRON - DI	BS2789 GRADE 420/12	BS EN1563-EN-GJS-400/15
6	WASHER	STAINLESS STEEL - 304	BS970 GRADE 304	BS EN10088-1.4301
7	NUT	STAINLESS STEEL - 304	BS970 GRADE 304	BS EN10088-1.4301
8	SPLIT PIN	STAINLESS STEEL	BS970 302S25	
9	DISC SCREW	STAINLESS STEEL - 304	BS970 GRADE 304	BS EN10088-1.4301
10	SIDE PIN	COPPER ALLOY - Leaded Brass	BS2874 CZ122	
11	GASKET	EPDM	BS2494 TYPE W	BS EN681-1 (TYPE WA 70)
12	HANGER PIN	STAINLESS STEEL	BS970 302S25	
13	BONNET	CAST IRON - C I	BS1452 GRADE 220	BS EN1561-EN-GJL-200
14	GASKET	EPDM	BS2494 TYPE W	BS EN681-1 (TYPE WA 70)
15	BOLT	STAINLESS STEEL - 304	BS970 GRADE 304	BS EN10088-1.4301
16	NUT	STAINLESS STEEL - 304	BS970 GRADE 304	BS EN10088-1.4301
17	IDENTIFICATION PLATE	ALUMINIUM		
18	PIN	STAINLESS STEEL	BS970 302S25	

For Waterworks/Drainage/Sewage Purpose & General Use